(1) Schematic Diagram of A Board

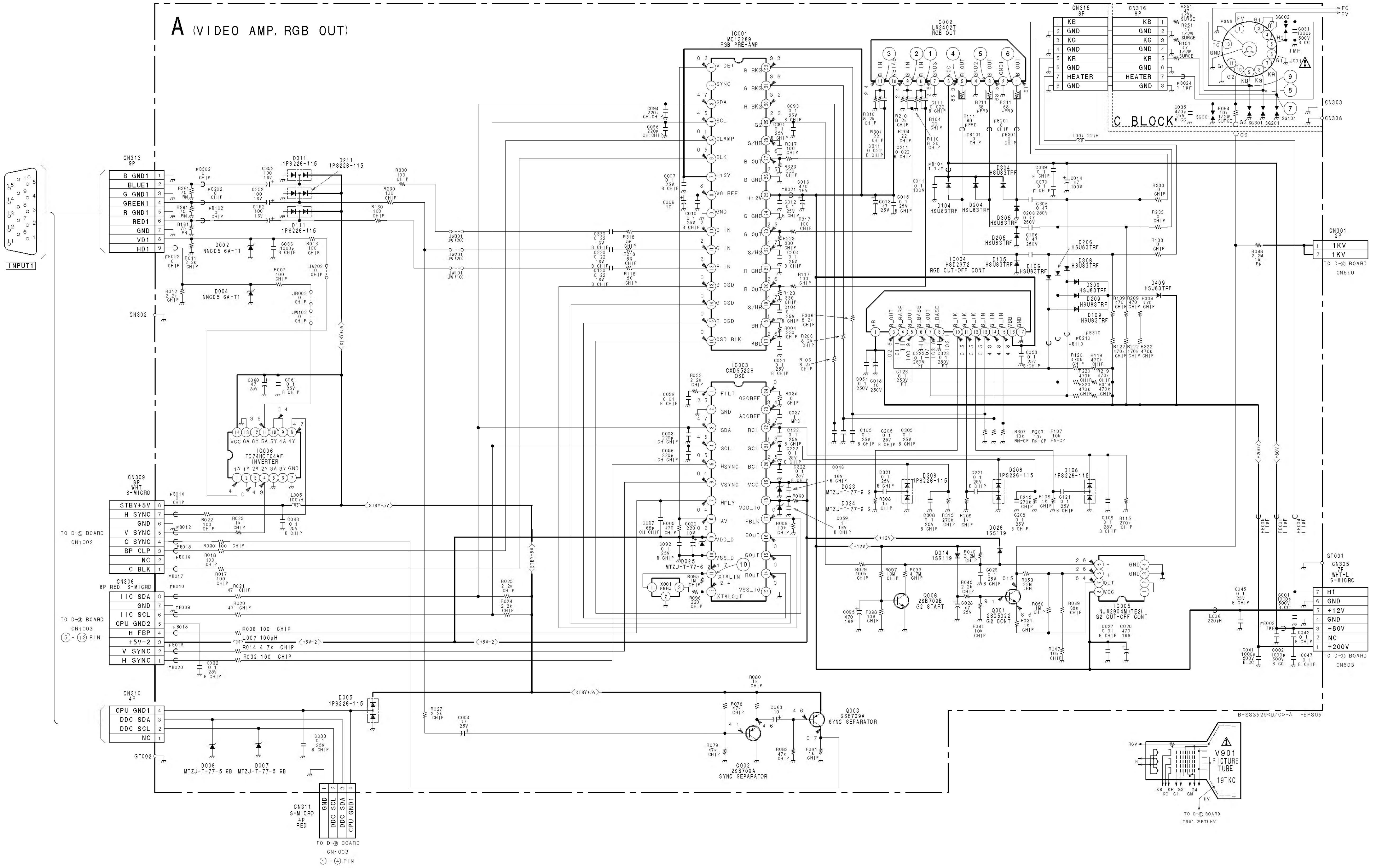
A (VIDEO AMP, RGB OUT)
C BLOCK
IC001 MC13289 RGB PRE-AMP
IC002 LM2402T RGB OUT
IC003 CXD9522S OSD
IC004 H8D2972 RGB CUT-OFF CONT
IC005 NJM2904M(TE2) G2 CUT-OFF CONT
IC006 TC74HCT04AF INVERTER
Q001 2SC5022 G2 CONT
Q002 2SB709A SYNC SEPARATOR
Q003 2SB709A SYNC SEPARATOR
Q006 2SB709B G2 START
INPUT1
CN313 9P
B GND1
BLUE1
G GND1
GREEN1
R GND1
RED1
GND
VD1
HD1
CN302
CN309 8P WHT S-MICRO
STBY+5V
H SYNC
GND
V SYNC
C SYNC
BP CLP
NC
C BLK
TO D-③ BOARD CN1002
CN306 8P RED S-MICRO
IIC SDA
GND
IIC SCL
CPU GND2
H FBP
+5V-2
V SYNC
H SYNC
TO D-③ BOARD CN1003 ⑤-⑫ PIN
CN310 4P
CPU GND1
DDC SDA
DDC SCL
NC
GT002
CN311 S-MICRO 4P RED
TO D-③ BOARD CN1003 ①-④ PIN
CN315 8P
CN316 8P
KB
GND
KG
KR
HEATER
CN303
CN308
CN301 2P
1KV
TO D-③ BOARD CN510
GT001
CN305 7P WHT-L S-MICRO
H1
+12V
+80V
+200V
TO D-③ BOARD CN603
V901 PICTURE TUBE 19TKC
TO D-① BOARD T901 (FBT) HV
B-SS3529<U/C>-A -EPS05

(3) Schematic Diagrams of N, H Boards

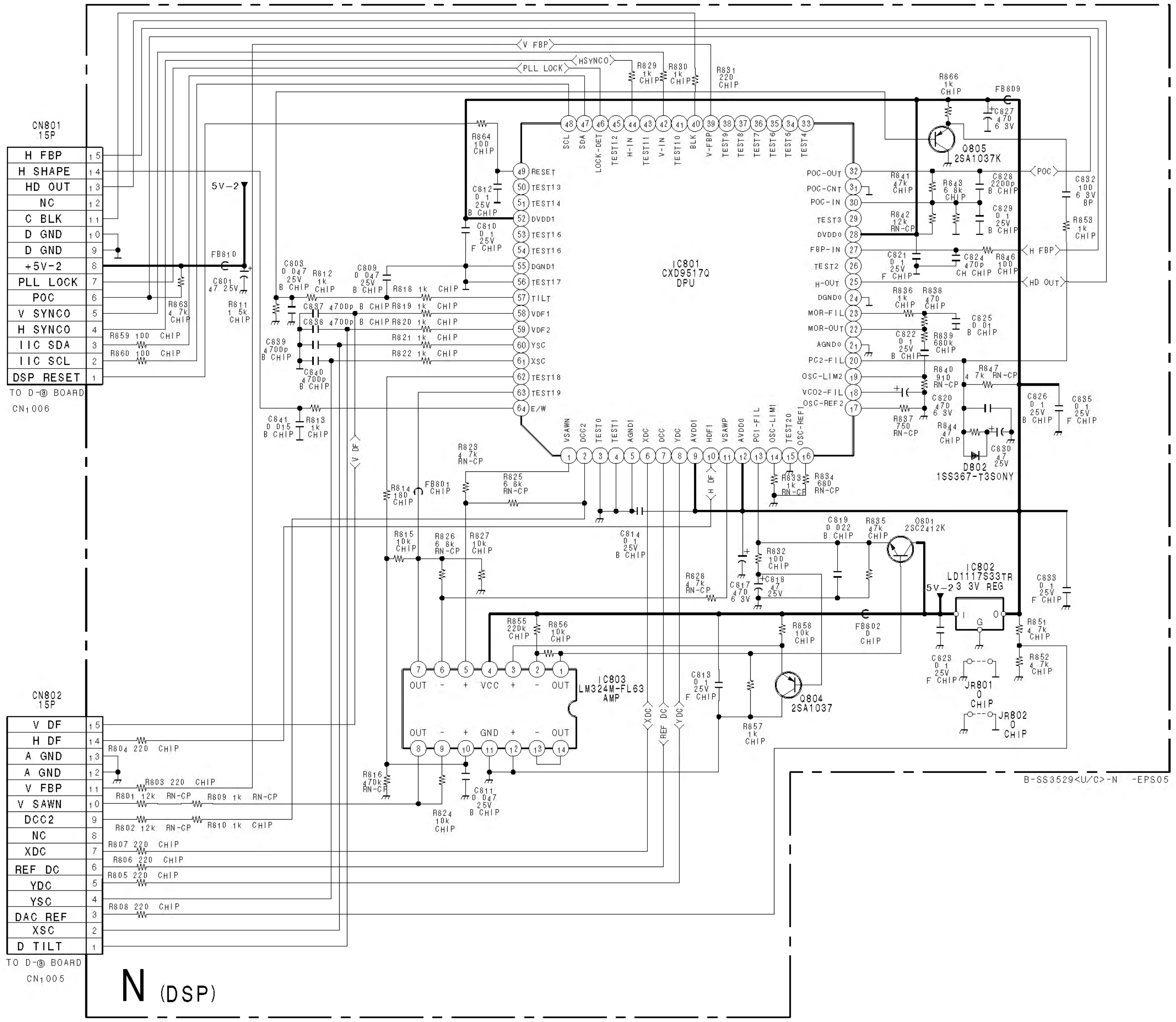

CN801 15P
H FBP
H SHAPE
HD OUT
NC
C BLK
D GND
D GND
+5V-2
PLL LOCK
POC
V SYNCO
H SYNCO
IIC SDA
IIC SCL
DSP RESET
TO D-B BOARD CN1006
5V-2
V FBP
HSYNCO
PLL LOCK
IC801 CXD9517Q DPU
Q805 2SA1037K
Q801 2SC2412K
IC802 LD1117S33TR 5V-2 3.3V REG
IC803 LM324M-FL63 AMP
Q804 2SA1037
D802 1SS367-T3SONY
JR801 0 CHIP
JR802 0 CHIP
CN802 15P
V DF
H DF
A GND
A GND
V FBP
V SAWN
DCC2
NC
XDC
REF DC
YDC
YSC
DAC REF
XSC
D TILT
TO D-B BOARD CN1005
N (DSP)
B-SS3529<U/C>-N -EPS05

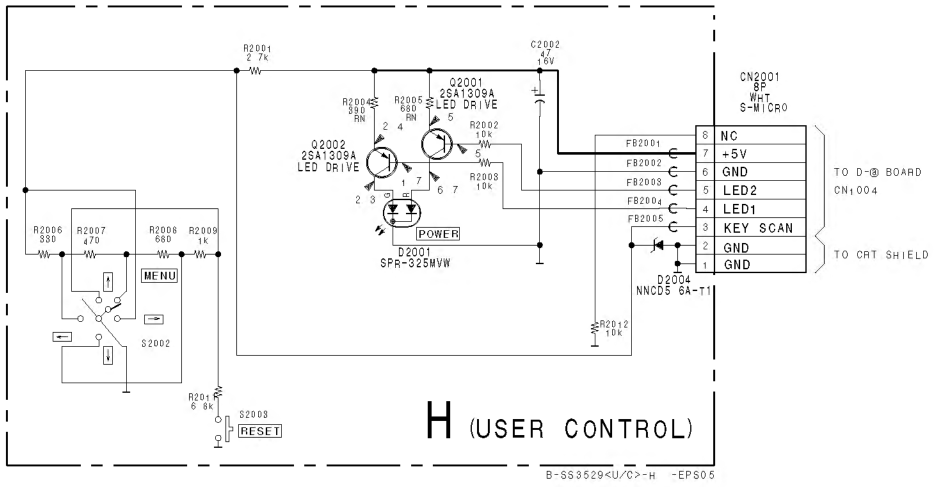

R2001 2.7k
C2002 47 16V
Q2001 2SA1309A LED DRIVE
Q2002 2SA1309A LED DRIVE
D2001 SPR-325MVW
POWER
CN2001 8P WHT S-MICRO
NC
+5V
GND
LED2
LED1
KEY SCAN
GND
GND
TO D-B BOARD CN1004
TO CRT SHIELD
D2004 NNCD5.6A-T1
R2012 10k
R2006 330
R2007 470
R2008 680
R2009 1k
MENU
S2002
R2011 6.8k
S2003
RESET
H (USER CONTROL)
B-SS3529<U/C>-H -EPS05

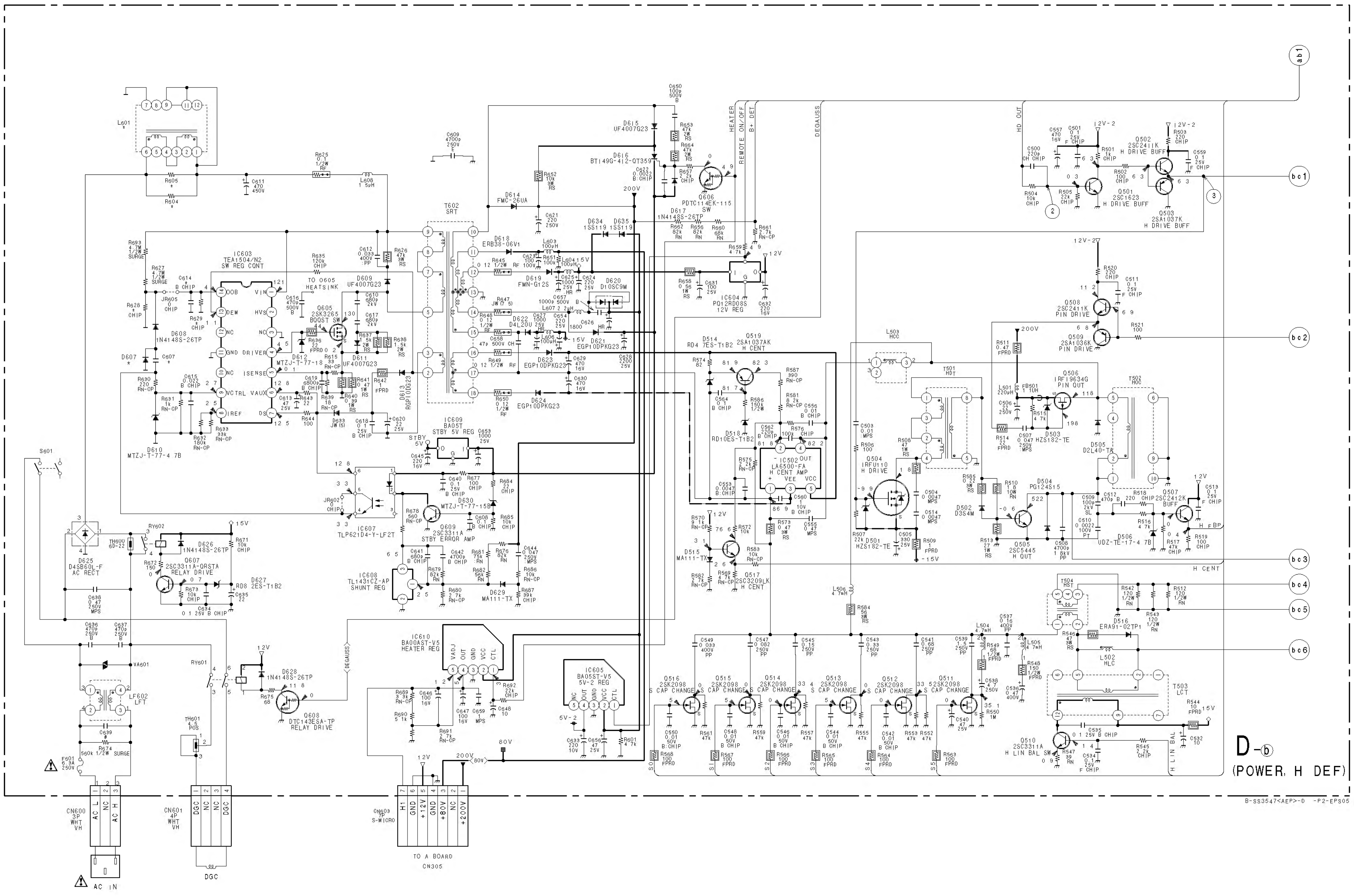
D-ⓑ
(POWER, H DEF)
B-SS3547<AEP>-D -P2-EPS05
IC603 TEA1504/N2 SW REG CONT
T602 SRT
Q605 2SK3265 BOOST SW
IC609 BA05T STBY 5V REG
IC607 TLP621D4-Y-LF2T
Q609 2SC3311A STBY ERROR AMP
IC608 TL1431CZ-AP SHUNT REG
IC610 BA00AST-V5 HEATER REG
IC605 BA05ST-V5 5V-2 REG
IC604 PQ12RD08S 12V REG
Q606 PDTC114EK-115 SW
Q607 2SC3311A-QRSTA RELAY DRIVE
Q608 DTC143ESA-TP RELAY DRIVE
D625 D4SB60L-F AC RECT
LF602 LFT
L601
S601
RY602
RY601
TH601
CN600 3P WHT VH
AC IN
CN601 4P WHT VH
DGC
CN603 7P S-MICRO
TO A BOARD CN305
HEATER
REMOTE ON/OFF
B+ DET
DEGAUSS
HD OUT
Q502 2SC2411K H DRIVE BUFF
Q501 2SC1623 H DRIVE BUFF
Q503 2SA1037K H DRIVE BUFF
Q508 2SC2411K PIN DRIVE
Q509 2SA1036K PIN DRIVE
Q506 IRF1634G PIN OUT
Q519 2SA1037AK H CENT
IC502 LA6500-FA H CENT AMP
Q517 2SC3209LK H CENT
Q504 IRFU110 H DRIVE
Q505 2SC5445 H OUT
Q507 2SC2412K BUFF
T501 HDT
T502 FBT
L503 HCC
L502 HLC
T503 LCT
T504 HST
Q516 2SK2098 S CAP CHANGE
Q515 2SK2098 S CAP CHANGE
Q514 2SK2098 S CAP CHANGE
Q513 2SK2098 S CAP CHANGE
Q512 2SK2098 S CAP CHANGE
Q511 2SK2098 S CAP CHANGE
Q510 2SC3311A H LIN BAL SW
H CENT
H LIN BAL
ab1
bc1
bc2
bc3
bc4
bc5
bc6
GND
+12V
+80V
NC
+200V
200V
80V
12V
15V
5V-2

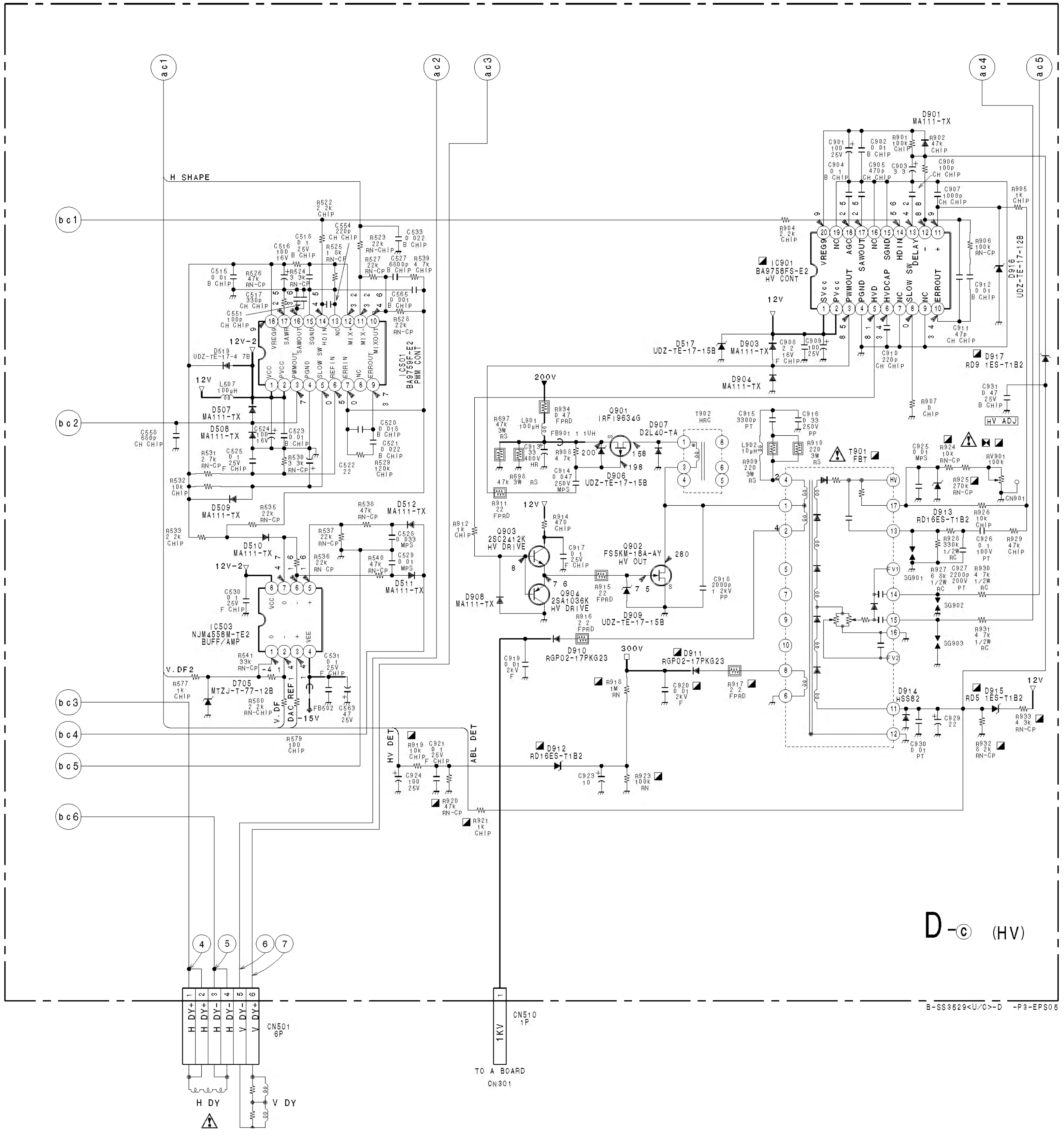
D-ⓒ (HV)
ac1
ac2
ac3
ac4
ac5
bc1
bc2
bc3
bc4
bc5
bc6
H SHAPE
IC501 BA9758F-E2 PWM CONT
IC503 NJM4556M-TE2 BUFF/AMP
IC901 BA9758FS-E2 HV CONT
D901 MA111-TX
D903 MA111-TX
D904 MA111-TX
D507 MA111-TX
D508 MA111-TX
D509 MA111-TX
D510 MA111-TX
D511 MA111-TX
D512 MA111-TX
D517 UDZ-TE-17-15B
D519 UDZ-TE-17-4.7B
D705 MTZJ-T-77-12B
D906 UDZ-TE-17-15B
D907 D2L40-TA
D908 MA111-TX
D909 UDZ-TE-17-15B
D910 RGP02-17PKG23
D911 RGP02-17PKG23
D912 RD16ES-T1B2
D913 RD16ES-T1B2
D914 HSS82
D915 RD5.1ES-T1B2
D916 UDZ-TE-17-12B
D917 RD9.1ES-T1B2
Q901 IRFI9634G
Q902 FS5KM-18A-AY HV OUT
Q903 2SC2412K HV DRIVE
Q904 2SA1036K HV DRIVE
T901 FBT
T902 HRC
RV901 100k
HV ADJ
CN901
SG901
SG902
SG903
200V
300V
12V
12V-2
-15V
V.DF2
V.DF
HV DET
ABL DET
L507 100μH
L901 100μH
L902 10μH
FB901 1.1UH
FB502
CN501 6P
H DY+
H DY-
V DY+
V DY-
H DY
V DY
CN510 1P
1KV
TO A BOARD CN301
4
5
6
7
B-SS3529<U/C>-D -P3-EPS05

(2) Schematic Diagrams of D (ⓐ, ⓑ, ⓒ) Board

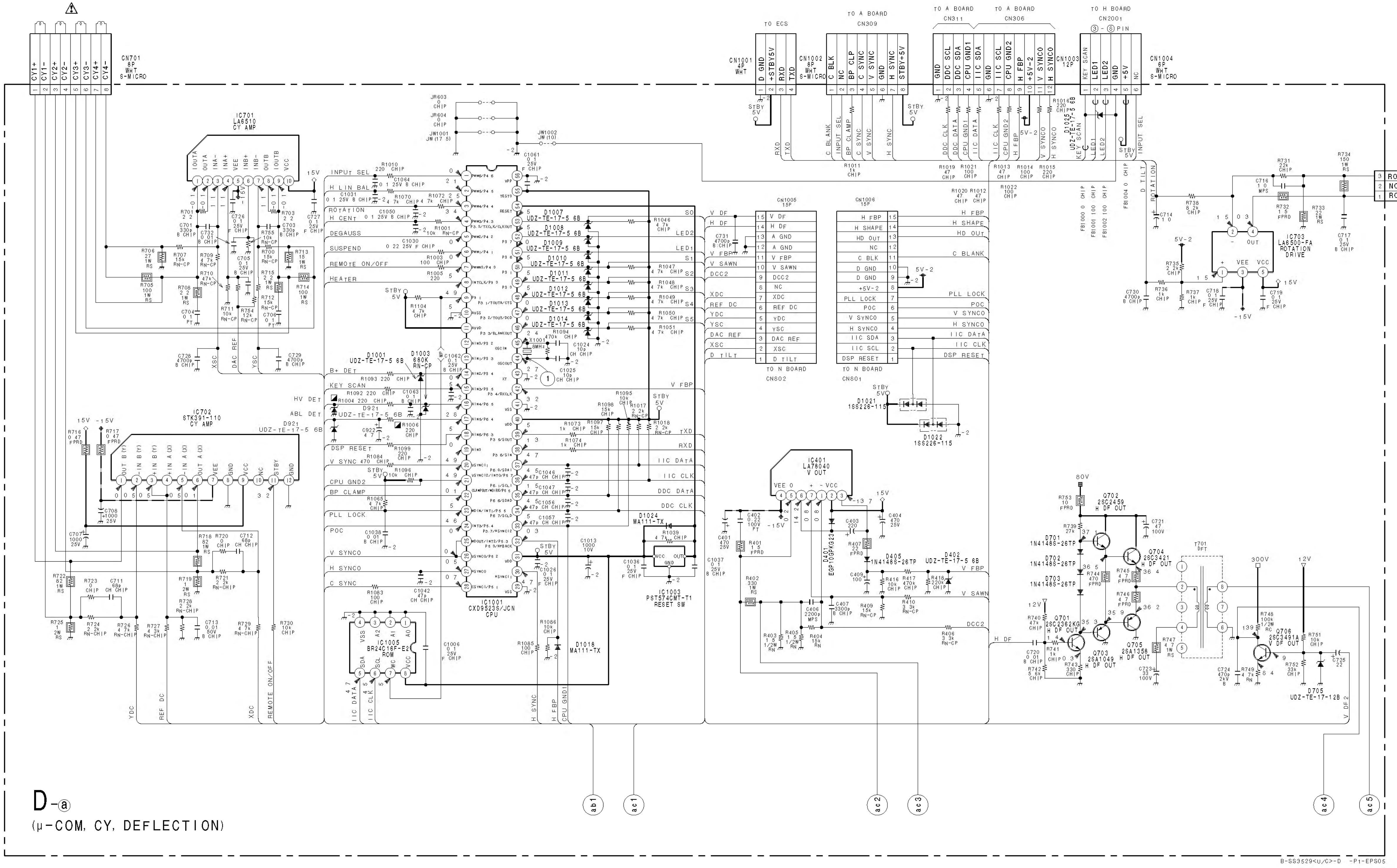
CN701 8P WHT S-MICRO
CY1+ CY1- CY2+ CY2- CY3+ CY3- CY4+ CY4-
IC701 LA6510 CY AMP
IC702 STK391-110 CY AMP
IC1001 CXD9523S/JCN CPU
IC1005 BR24C16F-E2 ROM
IC1003 PST574CMT-T1 RESET SW
IC401 LA78040 V OUT
IC703 LA6500-FA ROTATION DRIVE
CN1001 4P WHT TO ECS
CN1002 8P WHT S-MICRO
TO A BOARD CN309
CN1003 12P
TO A BOARD CN311
TO A BOARD CN306
CN1004 6P WHT S-MICRO
TO H BOARD CN2001 ③-⑧PIN
CN1005 15P TO N BOARD CN502
CN1006 15P TO N BOARD CN501
CN702 3P WHT S-MICRO
ROTATION- NC ROTATION+
ROTATION
Q701 2SC2362KG H DF OUT
Q702 2SC2459 H DF OUT
Q703 2SA1049 H DF OUT
Q704 2SC3421 H DF OUT
Q705 2SA1358 H DF OUT
Q706 2SC3491A V DF OUT
T701 DFT
X1001 8MHz
D1021 1SS226-115
D1022 1SS226-115
D1024 MA111-TX
D1018 MA111-TX
D401 EGP10GPKG23
D405 1N4148S-26TP
D402 UDZ-TE-17-5 6B
D705 UDZ-TE-17-12B
80V 300V 12V 15V -15V STBY 5V
ab1 ac1 ac2 ac3 ac4 ac5
D-ⓐ
(μ-COM, CY, DEFLECTION)